CLASS 1 DIV 1 ZONE 1 CONNECTOR SOLUTION

Amphenol EEC

HDE SERIES

CONNECTOR SYSTEM

PRODUCT GUIDE

HDE SERIES CONNECTOR
TABLE OF CONTENTS

3	Product Applications
4	Code Logic
5	Code Logic Continued / Examples
6	HDE Features
7	Product Options
8	Component Dimensions
9	Receptacle Dimensions
10	Grommets
11-14	Insert Arrangements

HDE SERIES CONNECTOR APPLICATIONS
FOR HAZARDOUS LOCATIONS

HDE Connectors are intermateable with the Pyle National AF/GD connectors and are designed for the following applications:

- Chemical Manufacturing Facilities
- Ship to Shore Communications (L.N.G. and Oil Tankers)
- Petroleum Refineries
- Oil Rigs
- Monitoring Gasoline Storage Facilities
- Gas Processing
- Synthetic Fuels Handling
- Plastics and Synthetic Rubber Processing
- Logging Equipment
- Motor Operated Valves
- Pipeline Pumping

HDE CODE LOGIC

H	D	E	S	-	1	0	-	2	-	1	8	-	2	0	-	6	2	1	P	N	-	0	1	-	R	-	L	X	X
1								2		3			4			5			6			7			8	9		10			11			12		

1 HDE SERIES IDENTIFICATION

2 MATERIAL
S Stainless Steel 316
Omit for Aluminum

3 SHELL STYLE
10 Plug, In-Line
15 Receptacle, In-Line
17 Receptacle, for Box or Panel-Mount
19 Receptacle, NPT Mount (Table 3)

4 CABLE RETENTION STYLE
* **1** Enclosure, (Junction Box)
** **2** Mechanical Clamp (With Grommet)
** **3** NPT Thread for EEx d Gland
** **4** Basket Weave Grip (With Grommet)
** **5** Compression Nut (With Grommet)
*** **7** NPT Internal Mount

* For 17 only
** For 10 and 15 only
*** For 19 only

5 GLAND SIZE / GROMMET / JUNCTION BOX
Style 1, Conduit Hub Threads, See Table 1 & 1a
Style 2, 4, & 5, Grommet Code, See Table 2
Style 3, See Gland Section for EEx d Gland
For Style 3 and 7 Threads, See Table 3

6 SHELL SIZE
16, C16, 20, C20, 24, C24, 28, and C28

7 INSERT CONFIGURATION
See Insert Section, Pages 11 - 14

8 CONTACT GENDER
P Pin (Male)
S Socket (Female)

9 CONTACT TERMINATION STYLE
N Crimp Contact
R Pressure
Omit for solder

10 OPTIONAL ALTERNATE INSERT KEY POSITION
Omit for normal

11 COLOR CODING
See Table 4

12 PIGTAIL LENGTH
LXX XX Pigtail length in inches for Style 17 and 19
L36 36" Standard for Style 17
L48 48" Standard for Style 19

TABLE 1 STANDARD HUB SIZE AND LOCATION FOR JUNCTION BOX, STYLE 1

Shell Size	Code	Hub Location	NPT
16	FH*	Top & Bottom	1-1/2" NPT
20	FH*	Top & Bottom	1-1/2" NPT
24	BK*	Bottom Only	2-1/2" NPT
28	BL*	Bottom Only	3" NPT

* Standard box for size
Omit for Panel-mount (no junction box)

TABLE 1A POSSIBLE HUB SIZE AND LOCATION OPTIONS FOR JUNCTION BOXES

Shell Size			
16	20	24	28
-	FF	-	-
FH	FG	-	-
FH*	FH*	-	-
-	FJ	-	-
-	BK	BK*	BK
-	-	-	BL*

F Top and bottom hubs with flat cover
B Bottom hub only with domed cover
C Bottom hub only with flat cover, optional
F 1 – 11-1/2 NPT
G 1-1/4 – 11-1/2 NPT
H 1-1/2 – 11-1/2 NPT
J 2 – 11-1/2 NPT
K 2-1/2 – 8 NPT
L 3 – 8 NPT
S Include electrical interlock switch

TABLE 2 GROMMET CODE FOR CABLE SIZE

Shell	Cable Ø	Code
16	.250 > .375	06
16	.375 > .500	08
16-20	.500 > .625	10
16-20	.625 > .750	12
16-20	.750 > .875	14
16-24	.875 > 1.000	16
16-24	1.000 > 1.125	18
16-24	1.125 > 1.250	20

Shell	Cable Ø	Code
16-24	1.250 > 1.375	22
16	1.375 > 1.437	23
20-28	1.375 > 1.500	24
20-28	1.500 > 1.625	26
20-28	1.625 > 1.750	28
20-28	1.750 > 1.875	30
20	1.875 > 1.937	31
24-28	1.875 > 2.000	32

Shell	Cable Ø	Code
24-28	2.00 > 2.125	34
24-28	2.125 > 2.250	36
24-28	2.250 > 2.375	38
24	2.375 > 2.437	39
28	2.375 > 2.500	40
28	2.500 > 2.625	42
28	2.625 > 2.750	44
28	2.750 > 2.875	46

Shell Size also includes 'C' length, ie shell size 24 includes C24

TABLE 3 STANDARD CABLE ADAPTER & THREAD SIZE

Shell	Style 3 Metric	Style 7 NPT	Style 19 NPT
16	M40x1.5	1-1/4	1-1/2
20	M50x1.5	1-1/2	2
24	M63x1.5	2	2-1/2
28	M75x1.5	2-1/2	3

TABLE 4 COLOR CODING

BK	Black	**BL**	Blue	**Y**	Yellow
R	Red	**G**	Green	**BR**	Brown
W	White	**OR**	Orange	**P**	Purple
				GY	Gray

EXAMPLES PART NUMBER WITH LOGIC DECODED

HDE-10-4-16-621PN-02-BK Plug, Basketweave, Shell 16, Insert 621 Pin, Rotated to Key 02, Black
HDE-15-7-C20-40P In-line Receptacle, NPT Adapter, Shell C20, 40P Insert
HDE-17-1-FH-16-321S Receptacle Junction Box

HDE SERIES FEATURES

- **Reverse Service** provides flexibility not offered with other connectors. Male or female configurations are possible with the same hardware. A full range of inserts are available for both power and control service.
- **Box or in-line** mounting options are available
- **Zero dwell snap action** virtually eliminates the possibility of dwell (spark) by quickly engaging, or disengaging contacts via a spring loaded design.
- **Internal labyrinth flame path** distributes and dissipates any dangerous ignition within the connector, further protecting the operator in hazardous locations.
- **Manufactured in aircraft quality aluminum** or 316 grade stainless steel.
- **The HDE series is designed and tested** to meet the most demanding circumstances, including Class 1 Div 1 / Zone 1 hazardous locations.
- **Explosion-proof and submersible:** upon being fully mated, the HDE series is able to withstand 200 PSI of external pressure, as well as 100 PSI of internal pressure.
- **Alternate Keyed Inserts** For added safety, inserts can be keyed in alternate positions to prevent mating of differing voltages, frequencies or services.
- **Attachment Receptacles** Sometimes called inline or cable-mounted, they are available with backshell variations and watertight threaded covers. With this design, assemblies can be built in “extension cord” fashion.
- **Corrosion Resistance Designed** for corrosive environments, junction boxes are sand cast, copper-free aluminum, protected by our robust powder coated finishing system. Plug and receptacle shells are machined from 6061T6 aluminum and finished by hard anodizing to exceed corrosion resistance requirements.
- **Electrical Interlock Switch Receptacles** with junction boxes are available with this variation, often used as a motor disconnect. The normally open switch is operated automatically by insertion/withdrawal of the mating plug.
- **Factory Sealing Junction box**, NPT and panel-mounted receptacles are pre-wired and factory sealed. No external seals are required.
- **Color Coding Plugs** and receptacles are available with color coding variations for specific application identification. This coding could include the plug coupling nut and cover with matching colors on various receptacle components.
- **Flexible Conduit Attachment** plugs and receptacles are available with backshell hardware for use with explosionproof, flexible conduit in Division 1 areas and Sealtite in Division 2.

Sealing all Junction Box, NPT and Panel-Mounted Receptacles	Pre-wired and factory sealed eliminating need for external seals
Covers, Environmental & Threaded	Available with all connectors
Pigtails	Normally 36”, can be any length to suit applications
Gender Connectors	Supplied with “reverse service” inserts when lineside power is carried in the plug to a receptacle
Keying Inserts	Keyed for phase & voltage separation
Color Coding Connectors	Coded for use identification
Purged Systems Factory Sealing	Our receptacles are ideal for use with this technology
Custom Assemblies	Available to user’s specifications

Receptacle, NPT
Designed to thread into explosion-proof enclosures

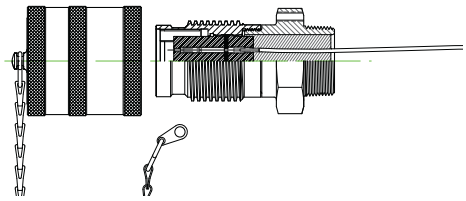

Receptacle, Panel Mount

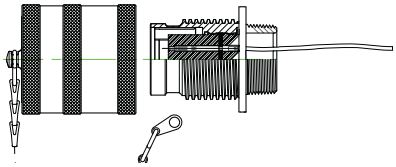

Receptacle, Attachment

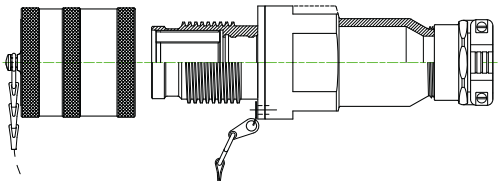

Receptacle, Junction Box
For Division 1 installations

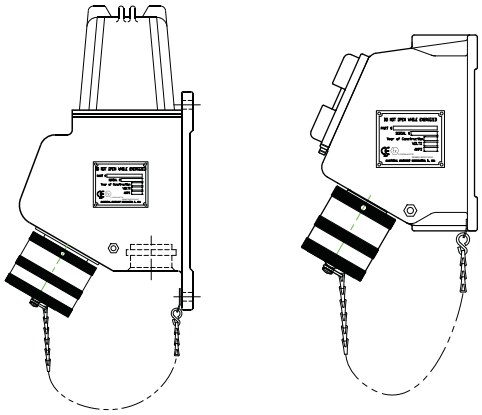

Plug Attachments

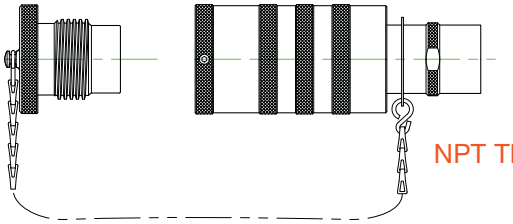

NPT Thread Only

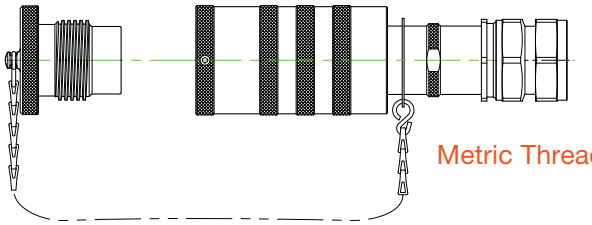

Metric Thread Only

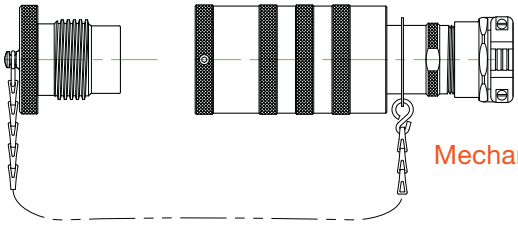

Mechanical Clamp

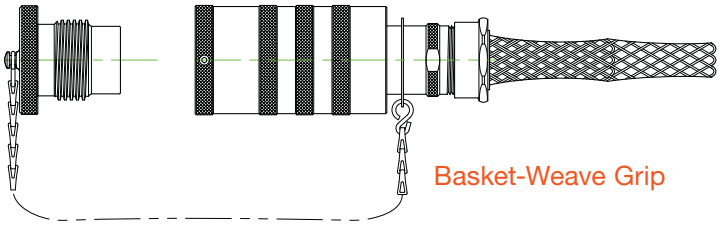

Basket-Weave Grip

COMPONENT DIMENSIONS

CABLE MOUNTED PLUG ASSEMBLY

Shell Size	Dim A	Dim B	Dim C
16	9.3"	10.3"	2.98
20	10.0"	11.0"	3.58
24	10.4"	11.4"	4.18
28	10.9"	11.9"	4.81

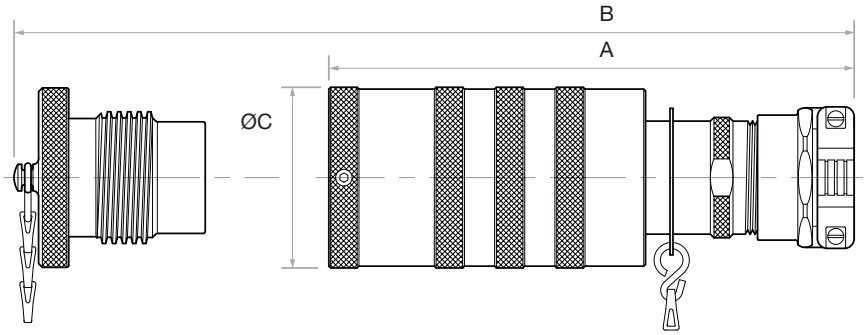

CABLE MOUNTED RECEPTACLE ASSEMBLY

Shell Size	Dim A	Dim B	Dim C
16	10.0"	3.06"	1.97
20	10.7"	3.56"	2.47
24	11.1"	4.19"	2.97
28	11.4"	4.69"	3.47

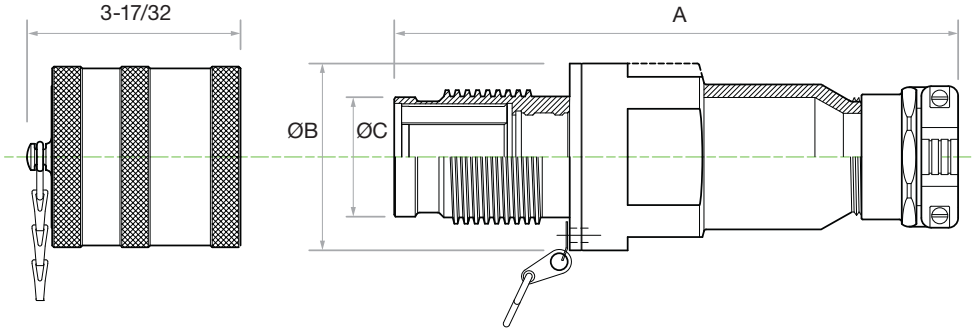

PANEL MOUNT RECEPTACLE ASSEMBLY

Shell Size	Dim A	Dim B	Thread G (16UN)
16	1.97"	4.06"	2
20	2.49"	4.06"	2-1/2
24	2.97"	4.06"	3-1/8
28	3.47"	4.06"	3-5/8

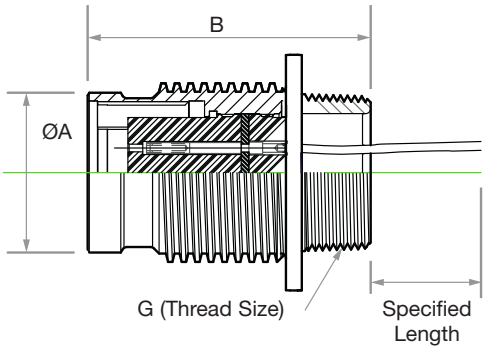

NPT MOUNTED RECEPTACLE ASSEMBLY

Shell Size	Dim A	Dim B	Dim C
16	4.16"	5"	1.97"
20	4.16"	5.03"	2.47"
24	4.16"	5.40"	2.97"
28	4.16"	5.47"	3.47"

Shell Size	Hex D	Hex E
16	2.5"	2.875"
20	3"	3.47"
24	3.5"	4.03"
28	4"	4.625"

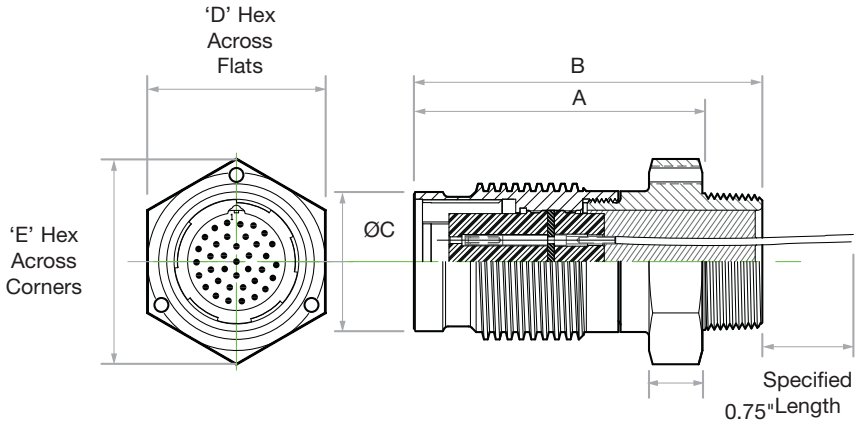

RECEPTACLE DIMENSIONS

CRIMP CONTACTS

Conduit Hub Size	Shell Size	Dimension A	Dimension B	Dimension C	Dimension D
1-1/4"	16	8-5/8"	5-5/16"	7-7/8"	11"
1-1/2"	20	8-5/8"	5-5/16"	8-1/16"	11-7/8"
2"	24	8-5/8"	6"	10-5/16"	12"
2"	28	8-5/8"	6-5/16"	11-7/8"	15-5/16"

SOLDER CONTACTS

Conduit Hub Size	Shell Size	Dimension A	Dimension B	Dimension C	Dimension D
1-1/4"	16	8-5/8"	5-5/16"	7-7/8"	11"
1-1/2"	20	8-5/8"	5-5/16"	8-1/16"	11-7/8"
2"	24	8-5/8"	6"	10-5/16"	12"
2"	28	8-5/8"	6-5/16"	11-7/8"	15-5/16"

Shell Sizes 16 & 20

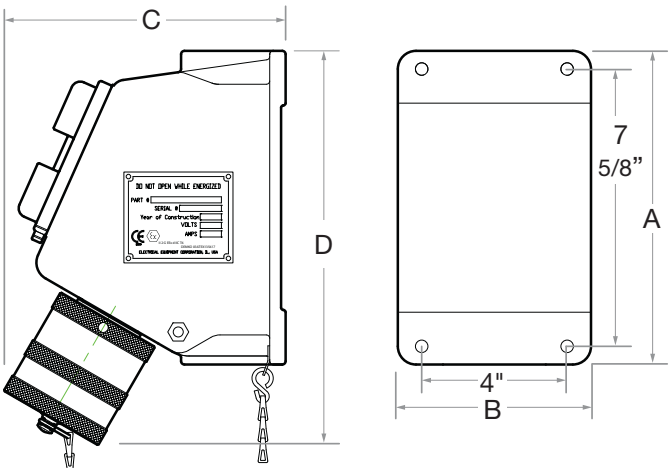

Shell Sizes 24 & 28

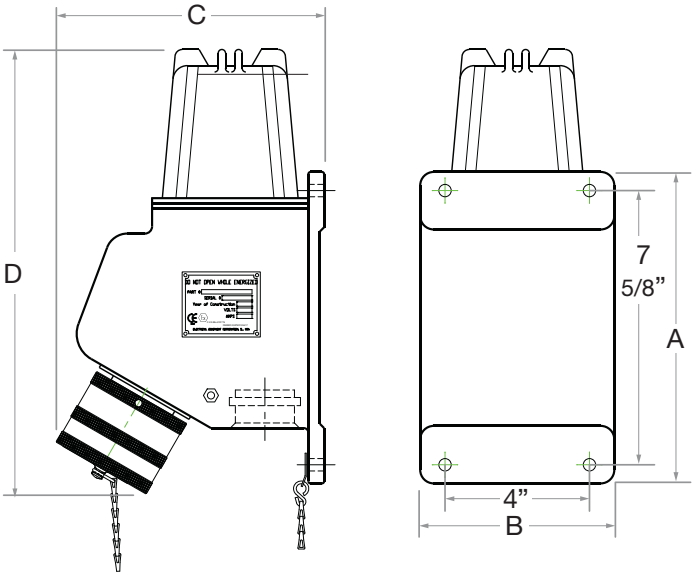

GROMMETS

Shell Size	Cable Diameter Dimension A				Cable Diameter Code No.	Grommets	Gland Washers	Basket Weave Grips		
	Inches		mm			Rub Grom	St. Steel	St. Steel		
	Min	Max	Min	Max		Cat No.	Cat No.	Cat No.	Inches	mm
16	.250	.375	6	10	06	HDS-6316-06	HDS-8016-08	HDS-5012-06	4	102
	.375	.500	10	13	08	HDS-6316-08		HDS-5016-08	5	127
	.500	.625	13	16	10	HDS-6316-10	HDS-8016-12	HDS-5016-10	6	152
	.625	.750	16	19	12	HDS-6316-12		HDS-5016-12	7	178
	.750	.875	19	22	14	HDS-6316-14	HDS-8016-16	HDS-5016-14	7-1/2	191
	.875	1.000	22	25	16	HDS-6316-16		HDS-5016-16	8-1/2	216
	1.000	1.125	25	29	18	HDS-6316-18	HDS-8016-20	HDS-5016-18	9	229
	1.125	1.250	29	32	20	HDS-6316-20		HDS-5016-20	10	254
	1.250	1.375	32	35	22	HDS-6316-22	HDS-8016-23	HDS-5016-22	10-1/2	267
	1.375	1.437	35	37	23	HDS-6316-23		HDS-5016-23	14-1/2	
20 or CB20	.500	.625	13	16	10	HDS-6320-10	HDS-8020-12	HDS-5020-10	6	152
	.625	.750	16	19	12	HDS-6320-12		HDS-5020-14	7-1/2	191
	.750	.875	19	22	14	HDS-6320-14	HDS-8020-16	HDS-5020-14	7-1/2	191
	.875	1.000	22	25	16	HDS-6320-16		HDS-5020-18	9	229
	1.000	1.125	25	29	18	HDS-6320-18	HDS-8020-20	HDS-5020-18	9	229
	1.125	1.250	29	32	20	HDS-6320-20		HDS-5020-20	10	254
	1.250	1.375	32	35	22	HDS-6320-22	HDS-8020-24	HDS-5020-24	11	279
	1.375	1.500	35	38	24	HDS-6320-24				
	1.500	1.625	38	41	26	HDS-6320-26	HDS-8020-28	HDS-5020-28	13	330
	1.625	1.750	41	44	28	HDS-6320-28				
	1.750	1.875	44	48	30	HDS-6320-30	HDS-8020-31	HDS-5020-31	14-1/2	368
	1.875	1.937	48	49	31	HDS-6320-31				
24 or CB24	.875	1.000	22	25	16	HDS-6324-16	HDS-8024-16	HDS-5024-16	8-1/2	216
	1.000	1.125	25	29	18	HDS-6324-18	HDS-8024-20	HDS-5024-20	10	254
	1.125	1.250	29	32	20	HDS-6324-20				
	1.250	1.375	32	35	22	HDS-6324-22	HDS-8024-24	HDS-5024-24	11	279
	1.375	1.500	35	38	24	HDS-6324-24				
	1.500	1.625	38	41	26	HDS-6324-26	HDS-8024-28	HDS-5024-28	13	330
	1.625	1.750	41	44	28	HDS-6324-28				
	1.750	1.875	44	48	30	HDS-6324-30	HDS-8024-32	HDS-5024-32	15	381
	1.875	2.000	48	51	32	HDS-6324-32				
	2.000	2.125	51	54	34	HDS-6324-34	HDS-8024-36	HDS-5024-36	16	406
	2.125	2.250	54	57	36	HDS-6324-36				
	2.250	2.375	57	60	38	HDS-6324-38	HDS-8024-39	HDS-5024-39	17	445
	2.375	2.437	60	62	39	HDS-6324-39				
28 or CB28	1.375	1.500	35	38	24	HDS-6328-24	HDS-8028-28	HDS-5028-28	13	330
	1.500	1.625	38	41	26	HDS-6328-26				
	1.625	1.750	41	44	28	HDS-6328-28				
	1.750	1.875	44	48	30	HDS-6328-30	HDS-8028-32	HDS-5028-32	15	381
	1.875	2.00	48	51	32	HDS-6328-32				
	2.000	2.125	51	54	34	HDS-6328-34	HDS-8028-36	HDS-5028-36	16	406
	2.125	2.250	54	57	36	HDS-6328-36				
	2.250	2.375	57	60	38	HDS-6328-38	HDS-8028-40	HDS-5028-40	17-1/2	445
	2.375	2.500	60	64	40	HDS-6328-40				
	2.500	2.625	64	67	42	HDS-6328-42	HDS-8028-44	HDS-5028-46	19	483
	2.625	2.750	67	70	44	HDS-6328-44				
	2.750	2.875	70	73	46	HDS-6328-46	HDS-8028-46			

INSERT ARRANGEMENTS

Grounding Contact Termination Symbol

Solder Well	Pressure	Crimp

Contact Symbols	○	●	⊕	○	◉	⊙	⊕	△	□	○	⊗
Wire Size AWG	18	16	12	10	8	4	1/0	4/0	350 MCM	500 MCM	646-777
Metric	0.75	1.5	4.0	6.0	10.0	25.0	50.0	120.00	185.00	240.00	300-400

Pre-assembled insert should be ordered mounted in barrel.

SERVICE VOLTAGE RATING
A = 240V, D = 600V

4 Contacts

Style	Wire Terminal Type	Shell Size	Insert Type	Dash Number	Catalog Number	Qty.	Size AWG	Service Voltage Rating
Mod I	Pressure	16	Pin Socket	23M 23F	EXZB-3016-23M EXZB-3016-23F	4	4	D

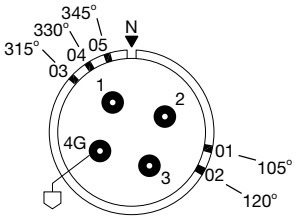

4 Contacts

Style	Wire Terminal Type	Shell Size	Insert Type	Dash Number	Catalog Number	Qty.	Size AWG	Current Rating
Mod I	Pressure	20	Pin Socket	40M 40F	EXZB-3020-40M EXZB-3020-40F	4	1/0	D

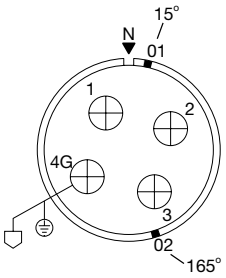

4 Contacts

Style	Wire Terminal Type	Shell Size	Insert Type	Dash Number	Catalog Number	Qty.	Size AWG	Service Voltage Rating
Mod I	Pressure	24	Pin Socket	39M 39F	EXZB-3024-39M EXZB-3024-39F	4	4/0	D

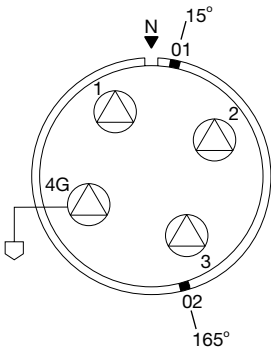

INSERT ARRANGEMENTS

6 Contacts

Style	Wire Terminal Type	Shell Size	Insert Type	Dash Number	Catalog Number	Qty.	Size AWG	Service Voltage Rating
Mod I	Pressure	28	Pin	42M	EXZB-3928-42M	4	4/0	D
			Socket	42F	EXZB-3928-42F	2	10	D

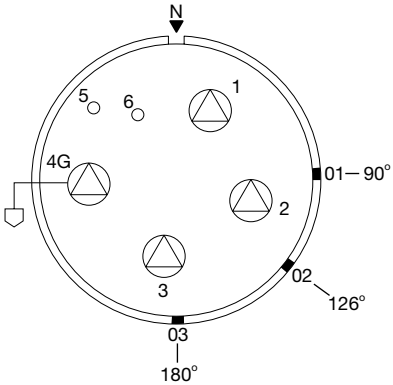

19 Contacts

Style	Wire Terminal Type	Shell Size	Insert Type	Dash Number	Catalog Number	Qty.	Size AWG	Service Voltage Rating
Mod III	Crimp	16	Pin	677PN	ZP-16-677PN	19	12	A
			Socket	677SN	ZP-16-677SN			

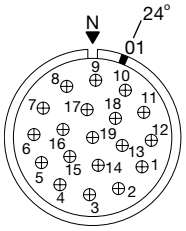

19 Contacts

Style	Wire Terminal Type	Shell Size	Insert Type	Dash Number	Catalog Number	Qty.	Size AWG	Service Voltage Rating
Mod III	Crimp	16	Pin	655PN	ZP-16-655PN	19	16	A
			Socket	655SN	ZP-16-655SN			

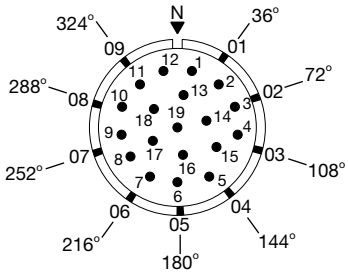

19 Contacts

Style	Wire Terminal Type	Shell Size	Insert Type	Dash Number	Catalog Number	Qty.	Size AWG	Service Voltage Rating
Mod III	Crimp	20	Pin	676PN	ZP-20-676PN	19	12	D
			Socket	676SN	ZP-20-676SN			

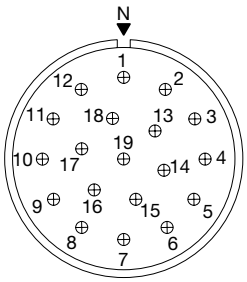

INSERT ARRANGEMENTS

19 Contacts

Style	Wire Terminal Type	Shell Size	Insert Type	Dash Number	Catalog Number	Qty.	Size AWG	Service Voltage Rating
Mod III	Crimp	20	Pin Socket	688PN 688SN	ZP-20-688PN ZP-20-688SN	19	12	D

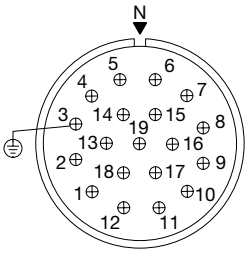

20 Contacts

Style	Wire Terminal Type	Shell Size	Insert Type	Dash Number	Catalog Number	Qty.	Size AWG	Service Voltage Rating
Mod III	Crimp	20	Pin Socket	632P 632S	ZP-20-632PN ZP-20-632SN	20	12	B Center A Outer

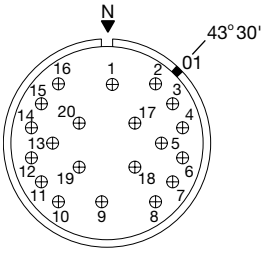

37 Contacts

Style	Wire Terminal Type	Shell Size	Insert Type	Dash Number	Catalog Number	Qty.	Size AWG	Service Voltage Rating
Mod III	Crimp	16	Pin Socket	621PN 621SN	ZP-16-621PN ZP-16-621SN	37	16	A

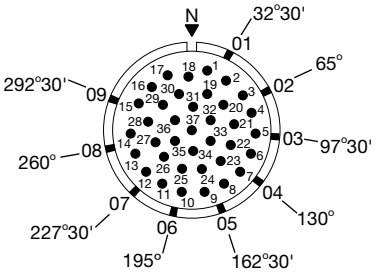

37 Contacts

Style	Wire Terminal Type	Shell Size	Insert Type	Dash Number	Catalog Number	Qty.	Size AWG	Service Voltage Rating
Mod III	Crimp	20	Pin Socket	686PN 686SN	ZP-20-686PN ZP-20-686SN	37	12	A

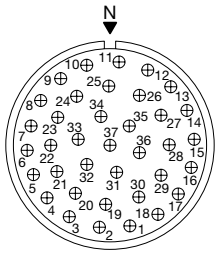

INSERT ARRANGEMENTS

37 Contacts

Style	Wire Terminal Type	Shell Size	Insert Type	Dash Number	Catalog Number	Qty.	Size AWG	Service Voltage Rating
Mod III	Crimp	20	Pin Socket	650PN 650SN	ZP-20-650PN ZP-20-650SN	37	12	A

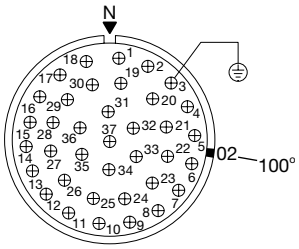

55 Contacts

Style	Wire Terminal Type	Shell Size	Insert Type	Dash Number	Catalog Number	Qty.	Size AWG	Service Voltage Rating
Mod III	Crimp	16	Pin Socket	640PN 640SN	ZP-16-640PN ZP-16-640SN	55	18	Inst.

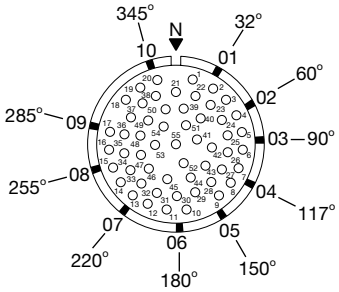

61 Contacts

Style	Wire Terminal Type	Shell Size	Insert Type	Dash Number	Catalog Number	Qty.	Size AWG	Service Voltage Rating
Mod III	Crimp	16	Pin Socket	633PN 633SN	ZP-16-633PN ZP-16-633SN	61	18	Inst.

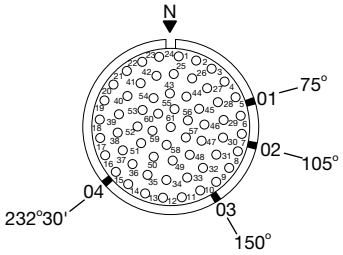

68 Contacts

Style	Wire Terminal Type	Shell Size	Insert Type	Dash Number	Catalog Number	Qty.	Size AWG	Service Voltage Rating
Mod III	Crimp	20	Pin Socket	313PN 313SN	ZP-20-613PN ZP-20-613SN	68	16	A

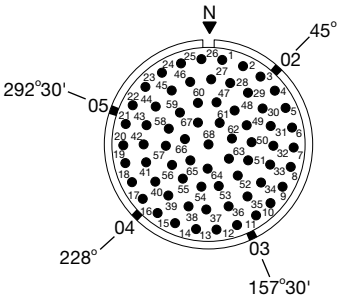

FOR MORE INFORMATION

100 Contacts

Style	Wire Terminal Type	Shell Size	Insert Type	Dash Number	Catalog Number	Qty.	Size AWG	Service Voltage Rating
Mod III	Crimp	24	Pin Socket	613PN 613SN	ZP-24-613PN ZP-24-613SN	100	16	A

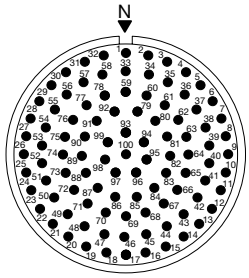

AMPHENOL EEC, INC.
4050 N Rockwell St
Chicago IL 60618
United States
Phone 773.463.8343
Fax 773.463.8344

©2018 AMPHENOL EEC, INC.